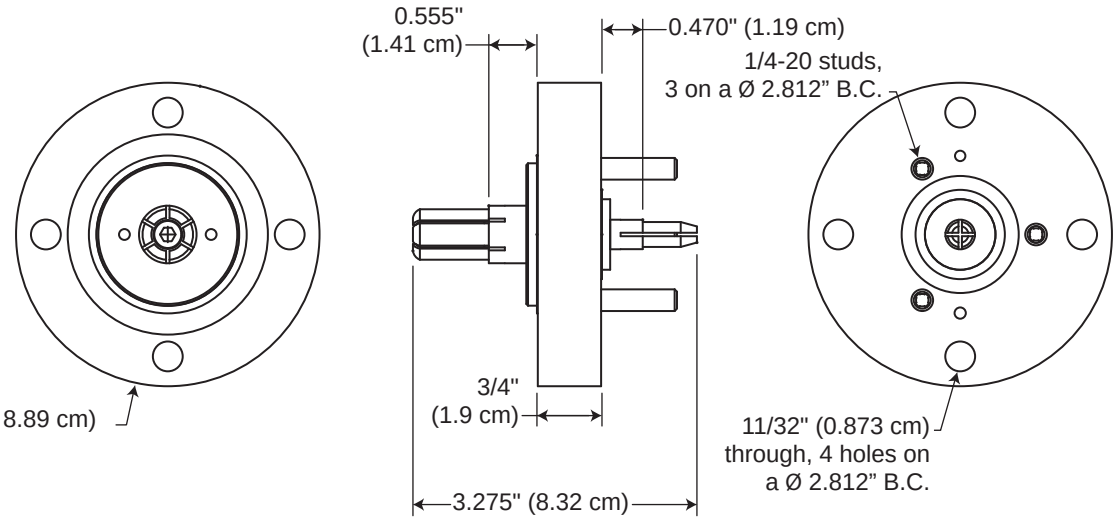

Includes:
1-5/8" Hardware: 5/16-18 Bolts, Lock Washers & Nuts
1-5/8" O-Ring
7/8" Hardware 1/4-20 Studs, Lock Washers & Nuts
7/8" O-Ring
Approximate weight 2-1/4 lb (1.0 kg)
Approx. shipping weight: 2-1/2 lb (1.1 kg)

1-5/8" to 7/8" EIA Reducer
Part No. 158F-620

Shively Labs®