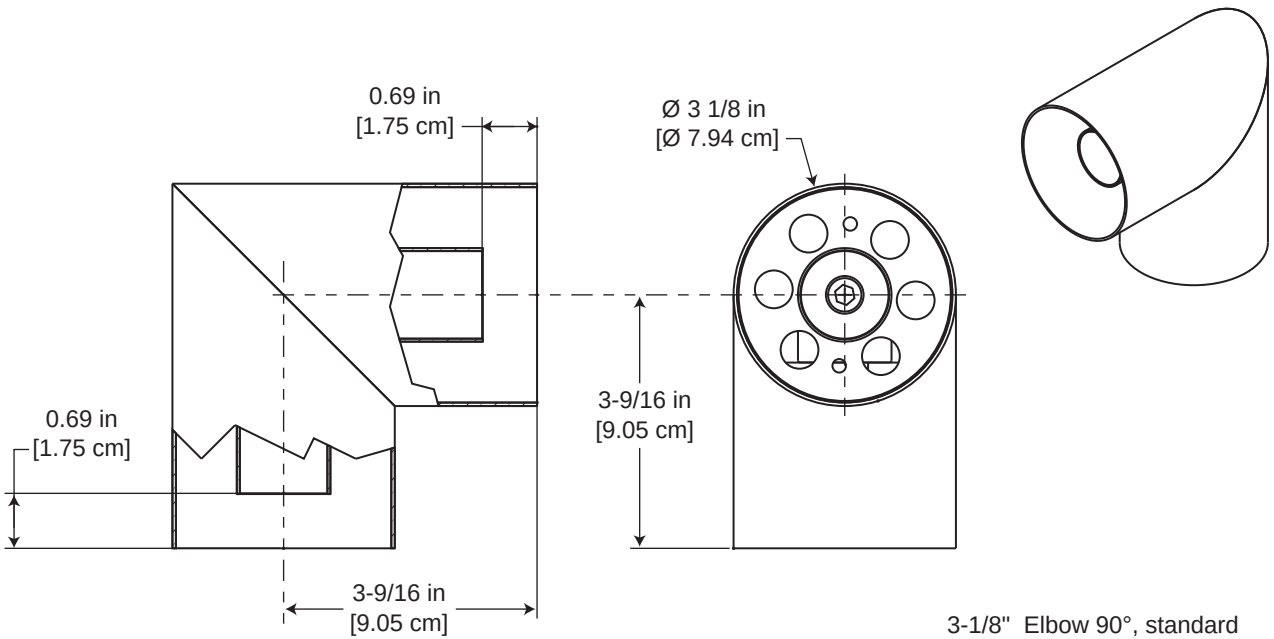

3-1/8" Elbow 90°, standard
Non-flange, equal leg
EIA standard outer and inner
Part no. 318NF-302

Approx. weight: 2-1/2 lb (1.13 kg)
Shipping weight: 3-1/2 lb (1.58 kg)

Shively Labs®