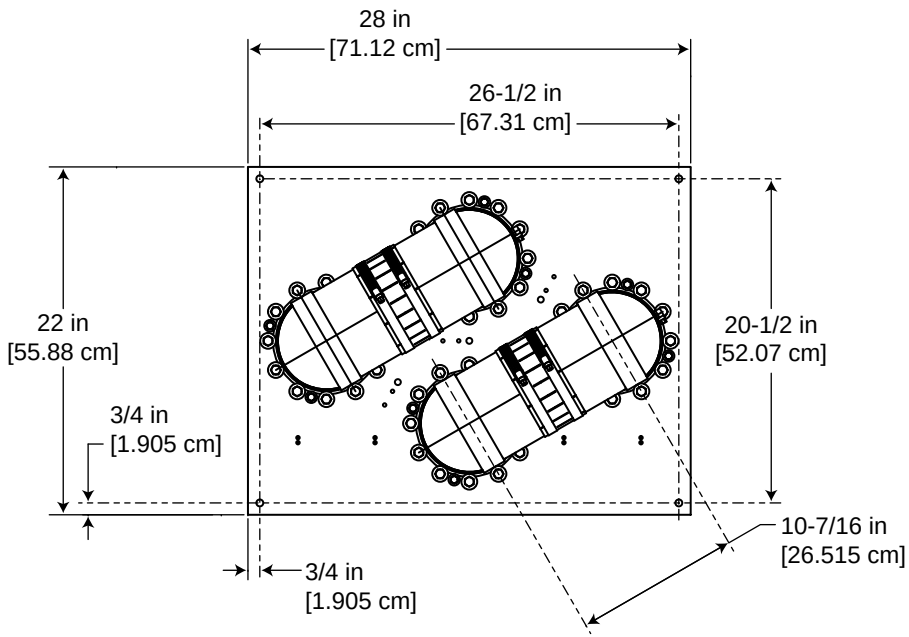

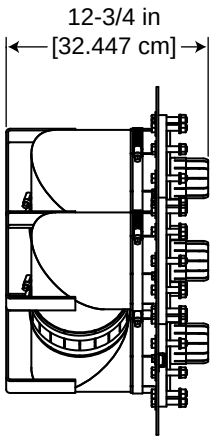

Patch panel, 6-1/8” flanged
4-port with 2 U-links
Part no. 618F-PP4

Approx. weight: 110 lb [49.89 kg]
Shipping weight:150 lb [68.04 kg]

Shively Labs®